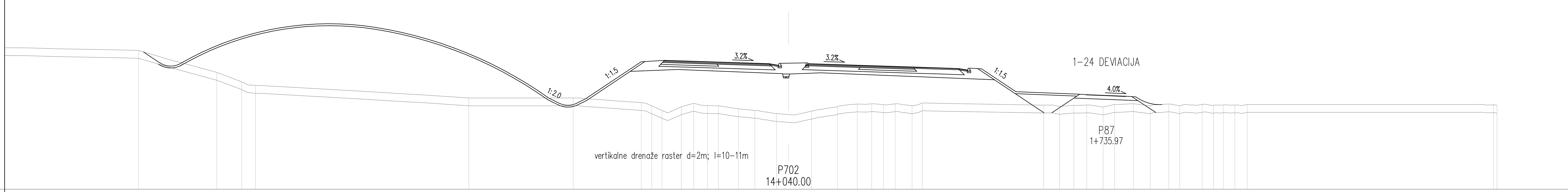


9.000

| | |
|---|---|
| CESTIŠČE | 15.437, 18.886, 18.758, 18.630, 18.630, 18.630, 18.502, 18.374, 18.262, 16.252, 16.192, 16.132 |
| OD OSI | 16.913, 9.500, 5.500, 1.500, 0.000, 1.488, 5.500, 9.500, 13.000, 1.500, 24.320, 1.500 |
| TEREN | 19.64, 17.96, 17.24, 16.97, 16.00, 16.00, 15.64, 15.39, 15.04, 15.32, 15.59, 15.40, 15.39, 15.16, 15.04, 14.81, 14.73, 14.98, 15.32, 15.53, 15.55, 15.48, 15.55, 15.40, 15.61, 15.45, 15.35, 15.44, 15.46, 15.30, 15.50, 15.56, 15.40, 15.54, 15.40, 15.50, 15.43, 15.47, 15.45, 15.50, 15.47, 15.44 |
| OD OSI | 49.84, 43.83, 41.92, 40.86, 24.52, 16.51, 11.29, 10.48, 9.70, 8.22, 7.27, 6.21, 5.37, 3.84, 2.59, 0.92, 0.00, 1.76, 3.74, 5.27, 6.38, 7.28, 8.19, 9.47, 10.25, 19.56, 20.78, 21.87, 22.86, 24.11, 24.99, 26.45, 27.73, 29.14, 29.99, 31.71, 32.58, 33.33, 34.22, 35.16, 54.04, 54.31 |

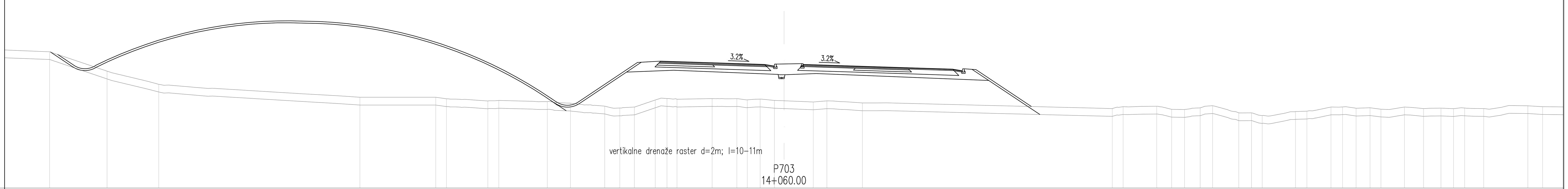


9.000

| | |
|---|---|
| CESTIŠČE | 15.377, 18.786, 18.658, 18.530, 18.530, 18.530, 18.402, 18.274, 18.162 |
| OD OSI | 16.703, 9.500, 5.500, 1.500, 0.000, 1.488, 5.500, 9.500, 13.000 |
| TEREN | 19.51, 18.01, 17.00, 16.00, 16.00, 15.88, 15.71, 15.75, 15.66, 15.54, 15.31, 15.17, 15.24, 15.79, 15.89, 15.84, 15.90, 15.89, 15.80, 15.86, 15.75, 15.63, 15.71, 15.56, 15.12, 15.27, 15.31, 15.07, 15.05, 15.18, 15.35, 14.80, 14.80, 14.59, 14.90, 14.93, 15.24, 15.26, 15.15, 15.18, 15.08, 15.25, 15.12, 15.16, 15.12, 15.17, 15.12, 15.34, 15.27 |
| OD OSI | 56.63, 52.19, 48.21, 32.70, 26.85, 26.03, 22.84, 21.99, 18.25, 16.46, 13.82, 12.66, 11.53, 9.93, 9.02, 8.25, 5.54, 3.64, 2.84, 1.84, 0.74, 2.25, 3.30, 6.05, 25.31, 26.15, 28.74, 29.89, 30.88, 32.09, 33.04, 35.06, 36.05, 36.88, 39.44, 40.32, 42.17, 43.07, 44.11, 45.19, 46.03, 47.84, 49.31, 50.66, 51.62, 52.48, 53.95, 57.35, 58.50 |

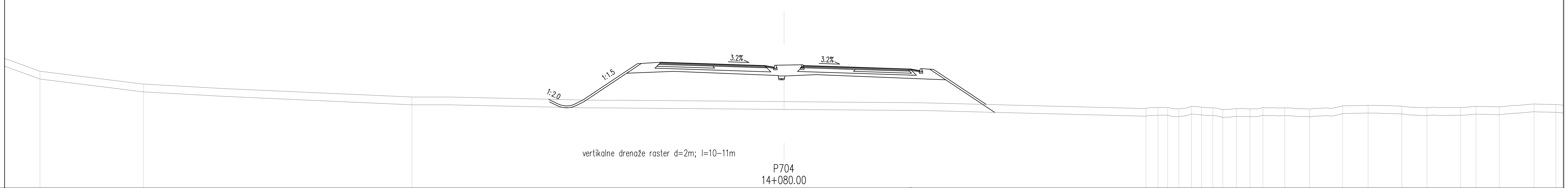


9.000

| | |
|---|---|
| CESTIŠČE | 15.317, 18.686, 18.558, 18.430, 18.430, 18.430, 18.302, 18.174, 18.167 |
| OD OSI | 16.770, 9.500, 5.500, 1.500, 0.000, 1.488, 5.500, 9.500, 9.730 |
| TEREN | 17.99, 17.00, 16.00, 15.12, 15.19, 15.18, 15.09, 15.29, 15.20, 15.17, 15.03, 15.12, 15.08, 15.19, 15.17, 15.07, 15.32, 15.36, 15.30, 15.17, 15.20, 15.28, 15.24, 15.47, 15.43 |
| OD OSI | 57.37, 49.39, 28.69, 27.90, 28.83, 29.59, 30.44, 31.41, 32.19, 33.07, 33.83, 34.88, 35.94, 36.92, 38.61, 40.53, 43.07, 45.04, 47.64, 49.57, 52.17, 53.36, 55.15, 57.83, 59.51 |

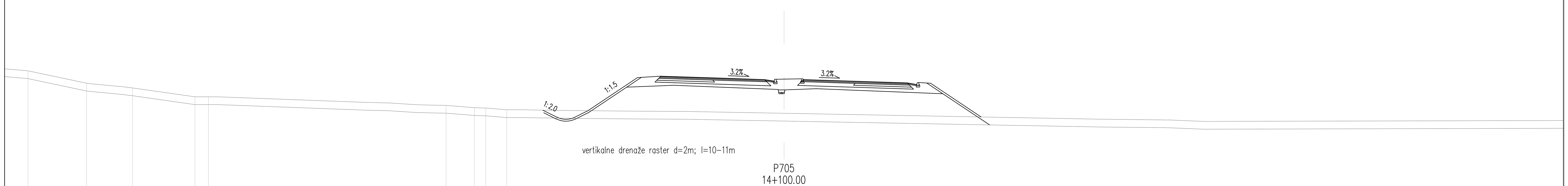


10.000

| | |
|---|---|
| CESTIŠČE | 15.425, 18.586, 18.458, 18.330, 18.330, 18.330, 18.202, 18.074 |
| OD OSI | 16.482, 9.500, 5.500, 1.500, 0.000, 1.488, 5.500, 9.500 |
| TEREN | 19.00, 18.05, 17.69, 17.00, 17.00, 16.33, 16.16, 16.13, 16.00 |
| OD OSI | 58.29, 53.77, 50.24, 45.41, 44.38, 26.05, 23.87, 23.00, 21.38 |

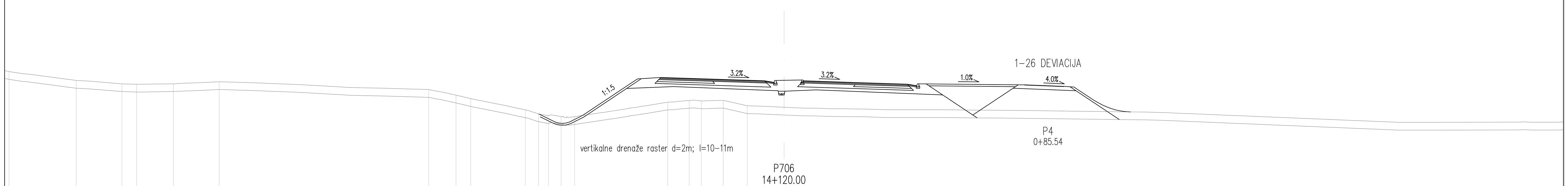


10.000

| | |
|---|---|
| CESTIŠČE | 15.057, 18.486, 18.358, 18.230, 18.230, 18.230, 18.102, 17.974, 17.922, 17.862, 17.802 |
| OD OSI | 16.882, 9.500, 5.500, 1.500, 0.000, 1.488, 5.500, 9.500, 1.500, 20.060, 1.500 |
| TEREN | 18.95, 18.26, 18.00, 17.96, 18.00, 18.16, 17.55, 17.13, 16.85, 15.99, 15.68, 15.54, 15.47, 15.47, 16.59, 16.71, 16.67, 16.73, 16.30 |
| OD OSI | 59.76, 54.58, 51.05, 49.91, 47.08, 43.55, 27.39, 25.29, 24.15, 19.95, 18.92, 18.16, 17.19, 16.14, 8.97, 7.31, 6.37, 4.69, 2.83 |

*projektant* JV

PRONIZ d.o.o. Ljubljana, C. Ljubljanske brigade 23a

& projektivni atelje nizke gradnje d.o.o. ljubljana, kersnikova 9

& SPIT GRADBENI INŽENIRING d.o.o. Vojkova 19, 5250 Solkan

& GINEX International d.o.o. PROJEKTIVNI BIRO

& PROJEKT d.d. NOVA GORICA

*projektant načrta* pa-ng projektivni atelje nizke gradnje 1000 LJUBLJANA, Kersnikova 9

*odg. vodja proj.* Janez Šenk, u.d.i.g. G-0474
*odg. proj. načrta* Katja Bebar, u.d.i.g. G-0547
*obdelali* Katja Bebar, u.d.i.g.

*investitor* DARS Družba za avtoceste v Republiki Sloveniji d.d.

*cesta* HC KOPER – DRAGONJA
*odsek* 0385 KOPER – DRAGONJA
*pododsek* .

*št. projekta* C-180/07
*št. načrta* 11-6/08
*stopnja obdelave* IDP
*objekt* GLAVNA TRASA
*opis* PREČNI PROFILI P 702 – P 706 P 87 dev. 1-24
*merilo* 1 : 200
*datum* september 2009 dopolnjeno oktober 2012

| št.odseka | arhivska št. | faza/objekt |
|---|---|---|
| 0385 | | 001.2101 |
| šifra risbe | | |
| G.132 | | |

*ident. št. risbe* *št. priloge* 10,1-1