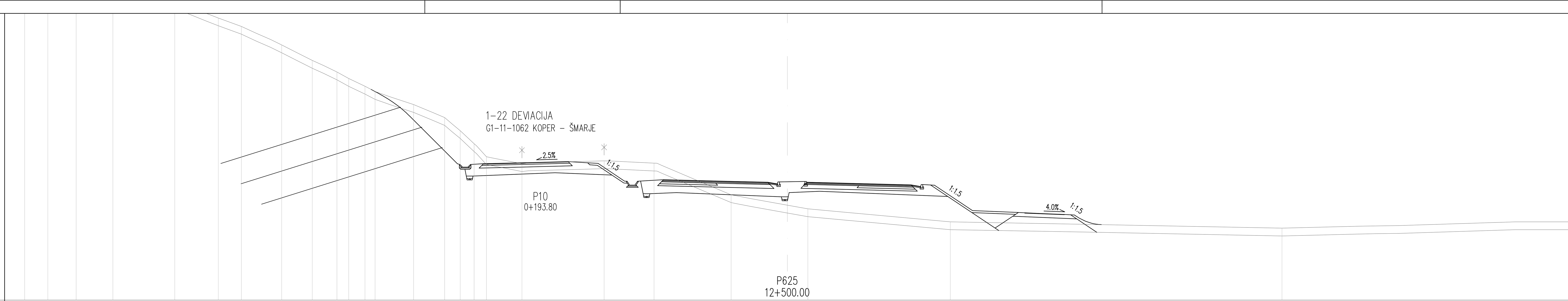

CESTIŠČE	31.463, 31.545, 31.626, 30.239, 30.139, 30.039, 30.039, 29.939, 29.839, 27.693, 27.633, 27.573
OD OSI	3.250, 20.080, 3.250, 9.500, 5.500, 1.500, 1.500, 5.500, 9.500, 1.500, 19.750, 1.500
TEREN	[illegible], 50.00, 49.19, 48.00, 46.37, 44.00, 42.64, 42.00, 40.58, 39.39, 38.50, 38.00, 37.41, 37.00, 36.00, 35.00, 34.00, 33.00, 32.00, 31.47, 31.69, 31.51, 29.08, 28.00, 27.00, 26.52
OD OSI	[illegible], 58.56, 56.78, 54.60, 51.78, 47.03, 43.69, 41.92, 38.82, 36.47, 34.58, 33.68, 32.43, 31.65, 28.70, 26.31, 25.12, 24.05, 23.10, 20.38, 14.07, 10.23, 4.32, 1.58, 12.52, 37.98

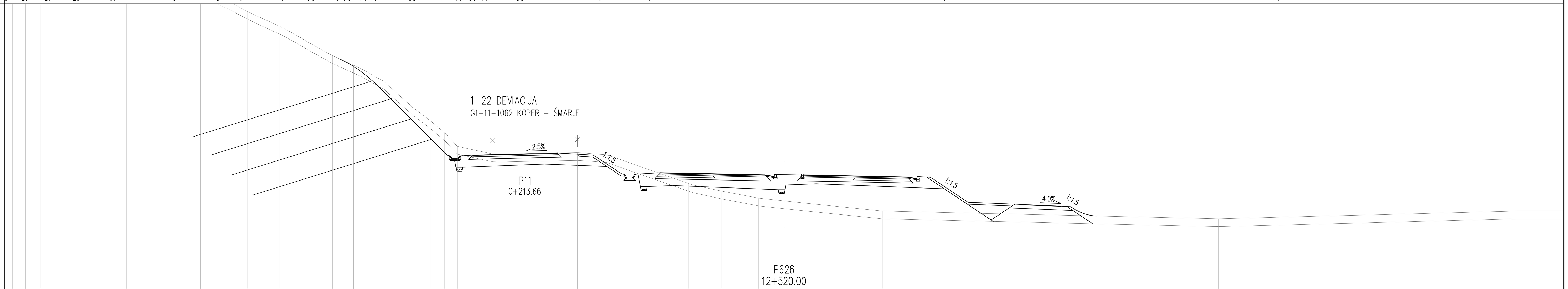

CESTIŠČE	31.326, 31.407, 31.489, 29.964, 29.882, 29.800, 29.800, 29.718, 29.636, 27.504, 27.444, 27.384
OD OSI	3.250, 20.720, 3.250, 9.500, 5.500, 1.500, 1.500, 5.500, 9.500, 1.500, 19.800, 1.500
TEREN	52.00, 51.41, 50.65, 47.00, 45.48, 45.00, 44.35, 43.68, 42.40, 41.25, 40.46, 39.00, 38.26, 37.15, 35.14, 34.00, 33.03, 32.00, 31.41, 31.51, 31.35, 29.13, 28.55, 28.00, 27.00, 26.40
OD OSI	59.50, 58.48, 57.31, 50.70, 47.33, 46.39, 44.98, 43.81, 41.35, 38.87, 37.41, 34.83, 33.19, 31.12, 28.77, 27.30, 26.16, 25.19, 22.46, 15.91, 13.66, 7.36, 4.84, 1.95, 7.62, 33.51

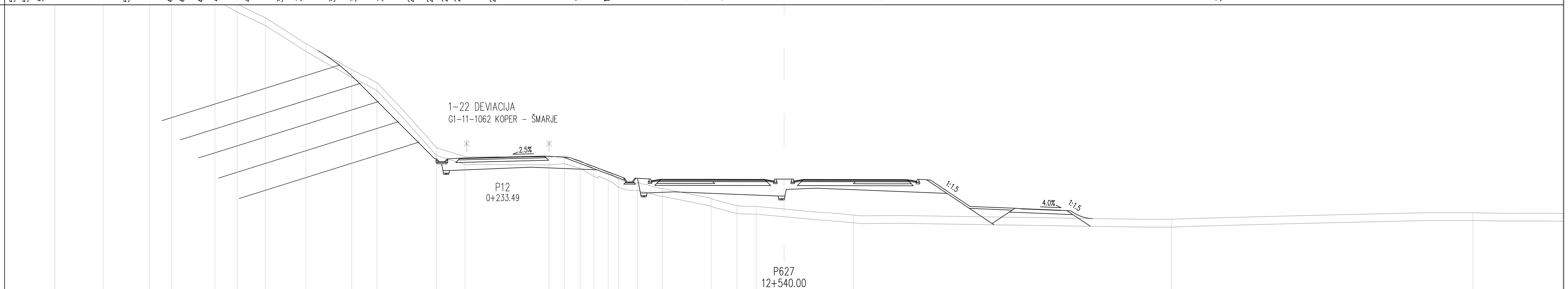

CESTIŠČE	31.197, 31.279, 31.360, 29.576, 29.568, 29.560, 29.560, 29.552, 29.544, 27.314, 27.254, 27.194
OD OSI	3.250, 21.730, 3.250, 9.500, 5.500, 1.500, 1.500, 5.500, 9.500, 1.500, 19.810, 1.500
TEREN	51.00, 49.00, 47.00, 46.16, 44.00, 43.05, 42.00, 40.00, 38.00, 37.00, 32.00, 31.32, 31.28, 31.38, 31.01, 30.39, 30.09, 29.55, 29.31, 28.85, 28.11, 27.54, 27.49, 26.83, 26.49, 27.00
OD OSI	56.22, 52.48, 48.92, 47.21, 43.88, 42.17, 39.99, 36.85, 33.33, 31.39, 26.80, 24.60, 18.11, 16.94, 15.71, 14.65, 13.55, 12.75, 11.31, 9.38, 5.62, 3.63, 2.15, 5.35, 29.87, 53.12

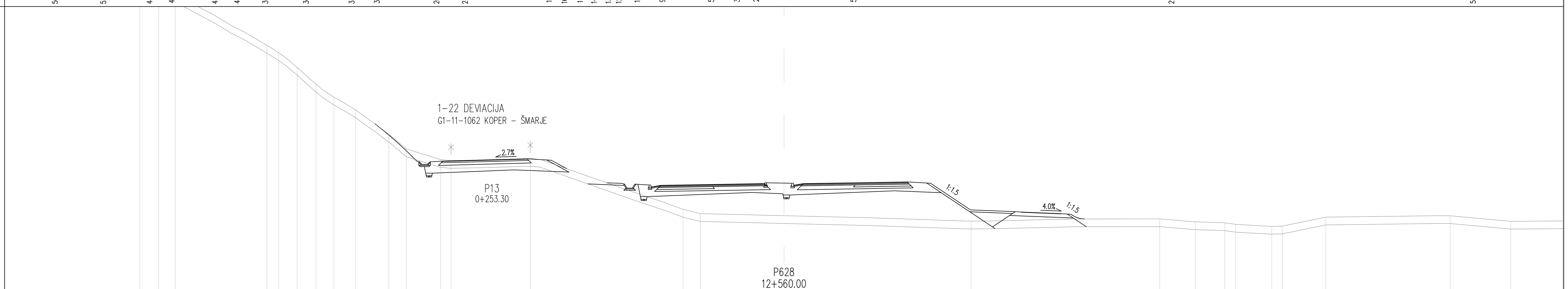

CESTIŠČE	31.062, 31.150, 31.238, 29.188, 29.254, 29.320, 29.320, 29.386, 29.452, 27.124, 27.064, 27.004
OD OSI	3.250, 23.060, 3.250, 9.500, 5.500, 1.500, 1.500, 5.500, 9.500, 1.500, 19.830, 1.500
TEREN	46.00, 45.00, 44.00, 40.00, 39.43, 38.30, 37.00, 36.00, 35.00, 33.12, 32.00, 31.18, 31.10, 31.26, 27.34, 27.00, 26.42, 26.60, 26.37, 26.29, 26.17, 26.02, 26.04, 26.73, 26.83, 26.41
OD OSI	49.67, 48.22, 46.94, 39.87, 38.97, 37.54, 36.09, 34.71, 33.02, 30.46, 29.12, 26.47, 25.67, 19.56, 7.78, 6.46, 14.43, 28.96, 31.71, 33.99, 34.82, 37.61, 38.42, 41.78, 51.36, 56.04

projektant JV

PRONIZ d.o.o. Ljubljana, C. Ljubljanske brigade 23a

& projektivni atelje nizke gradnje d.o.o. ljubljana, kersnikova 9

& SPIT GRADBENI INŽENIRING d.o.o. Vojkova 19, 5250 Solkan

& GINEX International d.o.o. PROJEKTIVNI BIRO

& PROJEKT d.d. NOVA GORICA

projektant načrta

pa-ng projektivni atelje nizke gradnje 1000 LJUBLJANA, Kersnikova 9

odg. vodja proj. Janez Šenk, u.d.i.g. G-0474

odg. proj. načrta Katja Bebar, u.d.i.g. G-0547

obdelali Katja Bebar, u.d.i.g.

investitor

DARS Družba za Avtoceste v Republiki Sloveniji d.d.

cesta	HC KOPER - DRAGONJA
odsek	0385 KOPER - DRAGONJA
pododsek	.
št. projekta	C-180/07
št. načrta	11-6/08
stopnja obdelave	IDP
objekt	GLAVNA TRASA
opis	PREČNI PROFILI P 625 - P 628 P 10 - P 13 dev. 1-22 P 5 - P 8 dev. 1-24
merilo	1 : 200
datum	september 2009 dopolnjeno oktober 2012

št.odseka	arhivska št.	faza/objekt
0385		001.2101
šifra risbe		
G.132		
ident. št. risbe		št. priloge 9,4-3